PLANS PREPARED FOR:

LITTLE TRAVERSE BAY BAND OF ODAWA INDIANS
PROPOSED NINE MILE POINT BOAT LAUNCH

CLIENT / AGENCY

LITTLE TRAVERSE BAY BAND OF ODAWA INDIANS
7500 ODAWA CIRCLE
HARBOR SPRINGS, MI 49740
231.242.1400

SHEET INDEX

C1.1	COVER SHEET
C2.1	GENERAL NOTES
C3.1	EXISTING CONDITIONS AND DEMOLITION PLAN
C3.2	SITE AND PHASING PLAN
C3.3	GRADING, DRAINAGE, AND SOIL EROSION CONTROL PLAN
C3.4	SITE PROFILE
C3.5	AQUADAM DETAILS
C4.1	SOIL EROSION CONTROL AND PAVING DETAILS
C4.2	RAMP DETAILS
C4.3	SKID PIER DETAIL
C4.4	SKID PIER CONSTRUCTION DETAILS

ENGINEER

Gourdie-Fraser

GOURDIE-FRASER
123 WEST FRONT STREET
TRAVERSE CITY, MICHIGAN 49684
1.800.900.5874

ISSUED DATE: 03/12/2015

(FOR BIDS)

LOCATION MAP

HAYES TOWNSHIP, CHARLEVOIX COUNTY, MICHIGAN
SCALE: 1" = 2000'

Know what's **below.** **Call** before you dig.

PUBLIC AGENCIES AND UTILITIES

PUBLIC AGENCIES

HAYES TOWNSHIP
Telephone: 231.547.6961

CHARLEVOIX COUNTY DEPARTMENT OF BUILDING SAFETY
Telephone: 231.547.7236

CHARLEVOIX COUNTY ROAD COMMISSION
Telephone: 231.547.6340

CHARLEVOIX COUNTY DRAIN COMMISSION
Telephone: 231.237.0107

MICHIGAN DEPARTMENT OF TRANSPORTATION (M.D.O.T.)
Telephone: 231.941.1986

MICHIGAN DEPARTMENT OF ENVIRONMENTAL QUALITY (MDEQ)
Telephone: 989.731.4920

UNITED STATES ARMY CORPS OF ENGINEERS
Telephone: 1.888.694.8313

UTILITY AGENCIES

GREAT LAKES ENERGY
Telephone: 1.888.485.2537

CONSUMERS ENERGY
Telephone: 231.929.6242

DTE ENERGY
Telephone: 231.258-3785

CHARTER COMMUNICATIONS
Telephone: 231.929.7012

AT&T MICHIGAN
Telephone: 231.348.8010

EMERGENCY SERVICES

EMERGENCY CALLS
911

EMERGENCY AMBULANCE SERVICE
911

POLICE AGENCIES
EMERGENCY SERVICE: **911**
Tribal Police: Telephone: 231.242.1500
City of Charlevoix Police: Telephone: 231.547.3258
Charlevoix County Sheriff: Telephone: 231.547.4461
Michigan State Police: Telephone: 989.732.5141

FIRE DEPARTMENTS
EMERGENCY SERVICE: **911**

MISS DIG
EMERGENCY SERVICE: **811**
Telephone: 1.800.482.7171

LITTLE TRAVERSE BAY BAND OF ODAWA INDIANS: PROPOSED BOAT LAUNCH

These documents are prepared in accordance with the contractual terms and conditions for this project.

GFA JOB# 12184

SHEET # C1.1

GENERAL NOTES

1. ALL ELEVATIONS ARE BASED ON NAVD 88 DATUM. EQUIVALENT IGLD 85 ELEVATIONS ARE NOTED, WHERE NECESSARY

2. SPECIAL CARE SHALL BE TAKEN IN EXCAVATING IN THE PROXIMITY OF ALL UNDERGROUND UTILITIES. THE CONTRACTOR SHALL SECURE ASSISTANCE FROM THE APPROPRIATE UTILITY COMPANY IN LOCATING ITS LINES. THE CONTRACTOR SHALL ALSO: PROVIDE SUPPORT FOR ANY UTILITY WITHIN THE EXCAVATION, PROVIDE PROPER COMPACTION UNDER ANY UNDERMINED UTILITY STRUCTURE AND, IF NECESSARY, INSTALL TEMPORARY SHEETING OR USE A TRENCH BOX TO MINIMIZE THE EXCAVATION. THE CONTRACTOR SHALL PROTECT AND SAVE HARMLESS FROM DAMAGE ALL UTILITIES, WHETHER PRIVATELY OR PUBLICLY OWNED, ABOVE OR BELOW GROUND SURFACE, WHICH MAY BE ENCOUNTERED DURING CONSTRUCTION, AT NO ADDITIONAL COST TO THE OWNER.

3. THE LOCATION OF EXISTING PUBLIC UTILITIES AND UNDERGROUND STRUCTURES SUCH AS PIPE LINES, ELECTRIC CONDUITS, SEWERS AND WATER LINES, OF RECORD ARE SHOWN ON THE PLANS. THE INFORMATION SHOWN IS BELIEVED TO BE REASONABLY CORRECT AND COMPLETE. HOWEVER, NEITHER THE CORRECTNESS NOR THE COMPLETENESS OF SUCH INFORMATION IS GUARANTEED. PRIOR TO THE START OF ANY OPERATIONS IN THE VICINITY OF ANY UTILITIES, THE CONTRACTOR SHALL NOTIFY THE UTILITY COMPANIES AND MISS DIG AND REQUEST THAT THEY STAKE OUT THE LOCATIONS OF THE UTILITIES IN QUESTION. THE CONTRACTOR SHALL COORDINATE THE RELOCATION OF ANY UTILITIES WITH THE UTILITY PROVIDOR. COST OF REPAIR FOR ANY DAMAGED UTILITY LINES THAT IS PROPERLY STAKED SHALL BE THE RESPONSIBILITY OF THE CONTRACTOR.

4. THE CONTRACTOR SHALL COMPLY WITH ALL APPLICABLE LAWS AND REGULATIONS GOVERNING THE FURNISHING AND USE OF SAFEGUARDS, SAFETY DEVICES AND PROTECTION EQUIPMENT. THE CONTRACTOR SHALL TAKE ANY NECESSARY PRECAUTIONS TO PROTECT THE LIFE AND HEALTH OF EMPLOYEES AND THE PUBLIC IN THE PERFORMANCE OF THE WORK.

5. FOR PROTECTION OF UNDERGROUND UTILITIES AND IN CONFORMANCE WITH PUBLIC ACT 53, 1974, THE CONTRACTOR SHALL DIAL 1-800-482-7171 A MINIMUM OF THREE FULL WORKING DAYS, EXCLUDING SATURDAYS, SUNDAYS, AND HOLIDAYS PRIOR TO BEGINNING EACH EXCAVATION IN AREAS WHERE PUBLIC UTILITIES HAVE NOT BEEN PREVIOUSLY LOCATED. MEMBERS WILL THUS BE ROUTINELY NOTIFIED. THIS DOES NOT RELIEVE THE CONTRACTOR OF THE RESPONSIBILITY OF NOTIFYING UTILITY OWNERS WHO MAY NOT BE PART OF THE "MISS DIG" ALERT SYSTEM.

6. EXISTING PROPERTY CORNERS ARE IDENTIFIED ON THE PLANS. IF A PROPERTY CORNER IS DISTURBED DURING CONSTRUCTION IT SHALL BE REPLACED AT THE CONTRACTOR'S EXPENSE BY A PROFESSIONAL LAND SURVEYOR.

7. CONTRACTOR SHALL PROVIDE TEMPORARY SUPPORT TO ANY MAILBOXES DISTURBED DURING CONSTRUCTION AND SHALL NOT INTERFERE WITH MAIL SERVICE. ALL DISTURBED MAILBOXES SHALL BE PLACED IN ORIGINAL LOCATION AND AT AN ELEVATION DETERMINED BY THE POSTAL SERVICE.

8. LOCAL TRAFFIC SHALL BE MAINTAINED AT ALL TIMES.

9. CONTRACTOR SHALL RESTORE ALL LAWNS, LANDSCAPE PLANTINGS, SIDEWALKS, COMMERCIAL SIGNS, ETC., AS REQUIRED AT NO ADDITIONAL COST TO THE OWNER.

10. CONTRACTOR SHALL PROVIDE ADEQUATE SUPPORT FOR UTILITY POLES AS NECESSARY. CONTRACTOR SHALL CONSULT WITH THE UTILITY COMPANY PRIOR TO ANY DISTURBANCE OF UTILITY POLE OR ANCHORING SYSTEM.

SOIL EROSION AND STORM WATER CONTROL NOTES

1. THE CONTRACTOR SHALL PROVIDE TEMPORARY SOIL EROSION CONTROL MEASURES PER P.A. 451 AS AMENDED WITH THE USE OF SILT FENCE AND OTHER TEMPORARY MEASURES. THE CONTRACTOR SHALL PROTECT THE ADJACENT AREA FROM ACCELERATED EROSION AND SEDIMENTATION FLOWS RESULTING FROM CONSTRUCTION. THE CONTRACTOR SHALL INSTALL ADDITIONAL TEMPORARY AND PERMANENT SOIL EROSION CONTROL MEASURES AS NEEDED, IF DIRECTED BY THE ENGINEER OR SOIL EROSION CONTROL OFFICER, AT NO ADDITIONAL COST TO THE PROJECT. THIS APPLIES TO SOIL PARTICLES OF ANY SIZE AND ALSO TO THAT WORK EXTENDING BEYOND THE WATER'S EDGE.

2. INSTALLATION AND MAINTENANCE OF TEMPORARY SOIL EROSION CONTROL MEASURES SHALL BE THE RESPONSIBILITY OF THE CONTRACTOR.

3. SHOULD ADDITIONAL SOIL EROSION CONTROL MEASURES BE DETERMINED TO BE NECESSARY BY EITHER THE SOIL EROSION CONTROL OFFICER OR THE OWNER'S ENGINEER THEY SHALL BE IN PLACE NO LATER THAN 24 HOURS FROM THE TIME OF NOTIFICATION TO THE GENERAL CONTRACTOR FOR THE PROJECT. IF NOT PLACED IN 24 HOURS OR LESS ALL ON SITE CONSTRUCTION WILL BE HALTED UNTIL SUCH MEASURES ARE INSTALLED AND APPROVED BY EITHER THE SOIL EROSION CONTROL OFFICER OR THE OWNER'S ENGINEER.

4. ALL DISTURBED NON-HARD SURFACE AREAS TO BE STABILIZED WITH TOPSOIL, SEEDED, FERTILIZED AND MULCHED. DISTRURBED AREAS SHALL BE TOPSOILED TO A DEPTH NOT LESS THAN FOUR (4) INCHES. SLOPES BETWEEN 1 ON 3 AND 1 ON 2 SHALL RECEIVE SEED WITH MULCH BLANKET.

5. IF REQUESTED BY THE ENGINEER OR SOIL EROSION CONTROL OFFICER, A WATER TRUCK SHALL BE KEPT ON STAND-BY ON SITE DURING THE CONSTRUCTION PHASE OF THE PROJECT. THE WATER TRUCK SHALL BE USED AS DIRECTED BY THE ENGINEER OR SOIL EROSION CONTROL OFFICER TO CONTROL WIND EROSION.

6. EXISTING STORM DRAINAGE DITCHES SHALL BE REBUILT IF FILLED IN OR REMOVED DURING CONSTRUCTION. THE CONTRACTOR IS RESPONSIBLE TO REPAIR OR REPLACE, AS REQUIRED, ALL DRAINAGE CULVERTS DAMAGED DURING CONSTRUCTION AND SHALL BE CONSIDERED INCIDENTAL TO THE PROJECT.

7. THE CONTRACTOR SHALL REMOVE OR CAUSE TO BE REMOVED ALL SEDIMENT OR SOILS THAT HAVE BEEN DROPPED, WASHED ONTO OR TRACKED OUT ONTO PUBLIC RIGHT-OF-WAY OR PRIVATE ROADS AT THE END OF EACH WORKING DAY OR AFTER EACH RAIN EVENT ON NON-WORK DAYS.

8. ALL REMOVED TOPSOIL WILL BE STOCKPILED WITHIN THE PROJECT AREA. IF ADDITIONAL TOPSOIL IS AVAILABLE AFTER TOPSOILING THE CONSTRUCTION AREA, IT WILL BE STOCKPILED WITHIN THE CONSTRUCTION AREA OR REMOVED AT THE CONTRACTOR'S EXPENSE AS DIRECTED BY THE OWNER OR ENGINEER.

9. THE CONTRACTOR SHALL REPAIR ALL WASHOUTS AND EROSION DURING THE GUARANTEE PERIOD OF ONE (1) YEAR AT NO ADDITIONAL COST TO THE OWNER.

ROAD CONSTRUCTION NOTES

1. ALL WORK SHALL BE PERFORMED IN ACCORDANCE WITH THE CURRENT M.D.O.T. STANDARD SPECIFICATIONS UNLESS OTHERWISE INDICATED ON THE PLANS AND CONTRACT DOCUMENTS. THE CONTRACTOR IS REQUIRED TO FAMILIARIZE THEMSELVES WITH THESE SPECIFICATIONS.

2. THE ENGINEER SHALL BE NOTIFIED AT LEAST 24 HOURS PRIOR TO BITUMINOUS PAVING.

3. THE PREPARED SUBBASE MUST BE TESTED AND APPROVED PRIOR TO PLACEMENT OF BASE.

4. IT SHALL BE THE RESPONSIBILITY OF THE CONTRACTOR TO ENSURE THAT THE GRAVEL TO BE USED ON THIS PROJECT IS APPROVED PRIOR TO PLACEMENT.

5. THE PREPARED GRAVEL WIDTH, DEPTH, AND COMPACTION MUST BE REVIEWED AND APPROVED BY THE OWNERS ENGINEER PRIOR TO BITUMINOUS PAVING.

6. ALL CONSTRUCTION SIGNING SHALL MEET M.M.U.T.C.D. STANDARDS.

7. ALL PEDESTRIAN AND VEHICULAR THROUGH TRAFFIC MUST BE MAINTAINED AT ALL TIMES. ANY LANE CLOSURES OR TEMPORARY REROUTING MUST BE APPROVED BY THE ENGINEER AND THE COST SHALL BE BORNE BY THE CONTRACTOR.

8. ALL PAVEMENT CUTS ARE TO BE MADE WITH SAW, IMMEDIATELY PRIOR TO PAVING.

9. PAVEMENT MARKING SHALL MEET M.D.O.T. SPECIFICATION AND STANDARDS AND IF NOT SHOWN ON THE PLANS SHALL BE CONSIDERED AS INCIDENTAL TO PAVING.

PLAN LEGEND

DESCRIPTION	EXISTING	PROPOSED
WATER MAIN		
SANITARY SEWER		
STORM SEWER		
SANITARY FORCE MAIN		
PROPERTY LINE		
RIGHT OF WAY		
SECTION LINE		
CONTOURS	100	100
GAS MAIN	GAS	
UNDERGROUND ELECTRIC	UGE	
OVERHEAD ELECTRIC	OHE	
FIBER OPTIC	FOPT	
CABLE TELEVISION	CATV	
OVERHEAD TELEPHONE	OHT	
UNDERGROUND TELEPHONE	UGT	
FENCE		
WETLANDS		
TREE LINE		
EDGE OF WATER		
SILT FENCE		
SANITARY MANHOLE (MH)		
STORM MANHOLE (MH)		
CATCH BASIN (CB)		
RISER		
GATE VALVE		
FIRE HYDRANT ASSEMBLY		
POLE, POWER OR ELECTRIC		
SIGN		
BENCH MARK (BM)	BM	
U/G UTILITY SIGN		
PROPERTY CORNER		
CURB STOP & BOX		
WATER SERVICE LEAD		
SANITARY SERVICE LEAD		
FIRE HYDRANT NUMBER	800	900
VALVE NUMBER	1060	1260
TEST PIT	TP-	TP-

Gourdie-Fraser
Municipal | Development | Transportation
PH 231.946.5874
FAX 231.946.3703
WWW.gourdiefraser.com
123 W Front Street
Traverse City, MI 49684

REV#	DATE	DRN	DESC

LITTLE TRAVERSE BAY BAND OF ODAWA INDIANS

NINE MILE POINT BOAT LAUNCH

GENERAL NOTES SHEET

SECTION 2, T34N-R07W,
HAYES TOWNSHIP, CHARLEVOIX COUNTY, MICHIGAN

These documents are prepared in accordance with the contractual terms and conditions for this project.

P.M.: DANIEL P. WAGNER
DR.: DAVE LEWIS
CKD.: DAN WAGNER
JOB NO.: 12184

C2.1

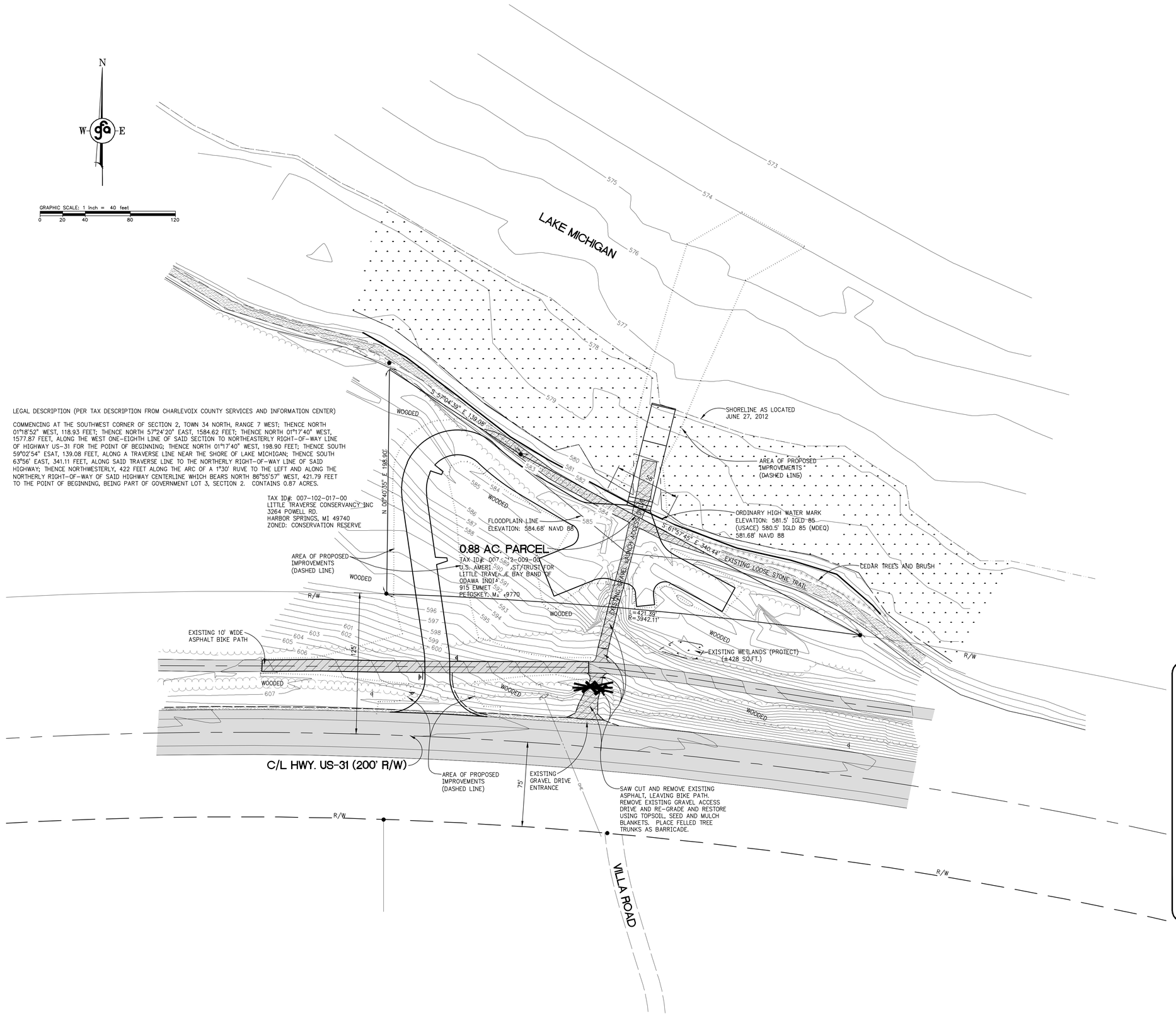

LEGAL DESCRIPTION (PER TAX DESCRIPTION FROM CHARLEVOIX COUNTY SERVICES AND INFORMATION CENTER)

COMMENCING AT THE SOUTHWEST CORNER OF SECTION 2, TOWN 34 NORTH, RANGE 7 WEST; THENCE NORTH 01°18'52" WEST, 118.93 FEET; THENCE NORTH 57°24'20" EAST, 1584.62 FEET; THENCE NORTH 01°17'40" WEST, 1577.87 FEET, ALONG THE WEST ONE-EIGHTH LINE OF SAID SECTION TO NORTHEASTERLY RIGHT-OF-WAY LINE OF HIGHWAY US-31 FOR THE POINT OF BEGINNING; THENCE NORTH 01°17'40" WEST, 198.90 FEET; THENCE SOUTH 59°02'54" ESAT, 139.08 FEET, ALONG A TRAVERSE LINE NEAR THE SHORE OF LAKE MICHIGAN; THENCE SOUTH 63°56' EAST, 341.11 FEET, ALONG SAID TRAVERSE LINE TO THE NORTHERLY RIGHT-OF-WAY LINE OF SAID HIGHWAY; THENCE NORTHWESTERLY, 422 FEET ALONG THE ARC OF A 1°30' RUVE TO THE LEFT AND ALONG THE NORTHERLY RIGHT-OF-WAY OF SAID HIGHWAY CENTERLINE WHICH BEARS NORTH 86°55'57" WEST, 421.79 FEET TO THE POINT OF BEGINNING, BEING PART OF GOVERNMENT LOT 3, SECTION 2. CONTAINS 0.87 ACRES.

Legend

	TANK COVER	N.	NORTH
	ELECTRICAL PANEL	S.	SOUTH
	GUARD POST	E.	EAST
	FLAG POLE	W.	WEST
	FLOOD LIGHT	°	DEGREES
	CATCH BASIN	'	FEET OR MINUTES
	TEST LEAD	''	INCHES OR SECONDS
	LIGHT POLE	Sq.	SQUARE
	CURB STOP	Ft.	FEET
	MANHOLE	Vol.	VOLUME
	ELEC. TRANSFORMER	Pg.	PAGE
	FIRE HYDRANT	O.R.	OFFICIAL RECORD
	MAILBOX	Calc.	CALCULATED
	SIGN	Rec.	RECORD
	UTILITY POLE	R/W	RIGHT OF WAY
	TELE. RISER	C/L	CENTERLINE
	FOUND IRON	T	TITLE
	FOUND MONUMENT		
	SECTION CORNER LABEL		
	SOIL BORING		
		X	REMOVAL
	DEMOLITION LIMITS		CLEARING LIMITS

VERTICAL DATUM: NAVD 88

Gourdie-Fraser
Municipal | Development | Transportation
PH 231.946.5874
FAX 231.946.3703
www.gourdiefraser.com
123 W. Front Street
Traverse City, MI 49684

REV#	DATE	DRN	DESC

These documents are prepared in accordance with the contractual terms and conditions for this project.

LITTLE TRAVERSE BAY BAND OF ODAWA INDIANS
NINE MILE POINT BOAT LAUNCH
EXISTING CONDITIONS AND DEMOLITION PLAN
SECTION 2, T34N-R07W,
HAYES TOWNSHIP, CHARLEVOIX COUNTY, MICHIGAN

P.M.: DAN WAGNER
DR.: DAVE LEWIS
CKD.: DPW
JOB NO.: 12184
C3.1

T:\PROJECTS\12184\ENG\DWG\REV01\12184_EC_FOR CORPS COMMENTS.DWG\(08/22/14 1:07 PM) DLEWIS

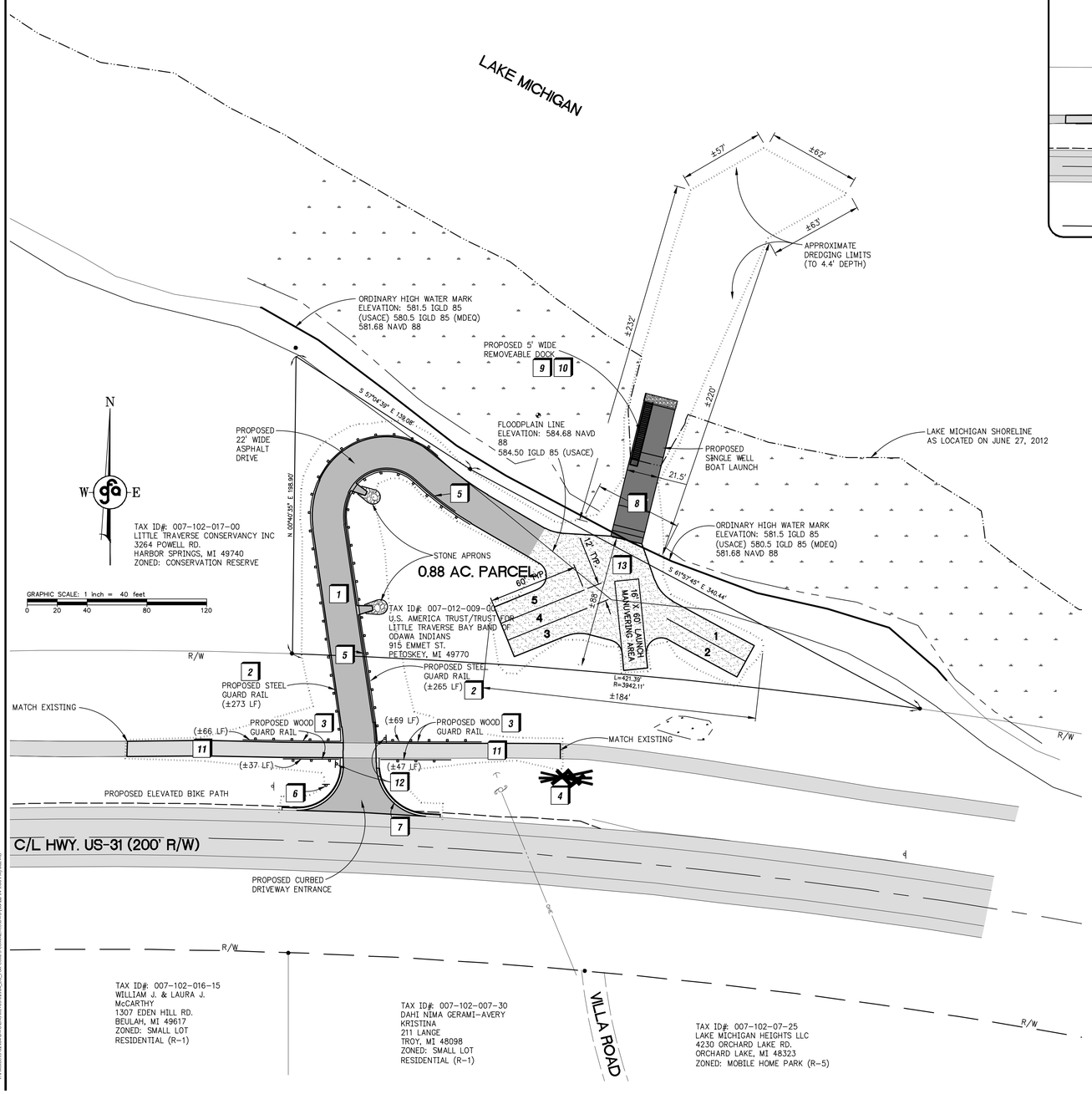

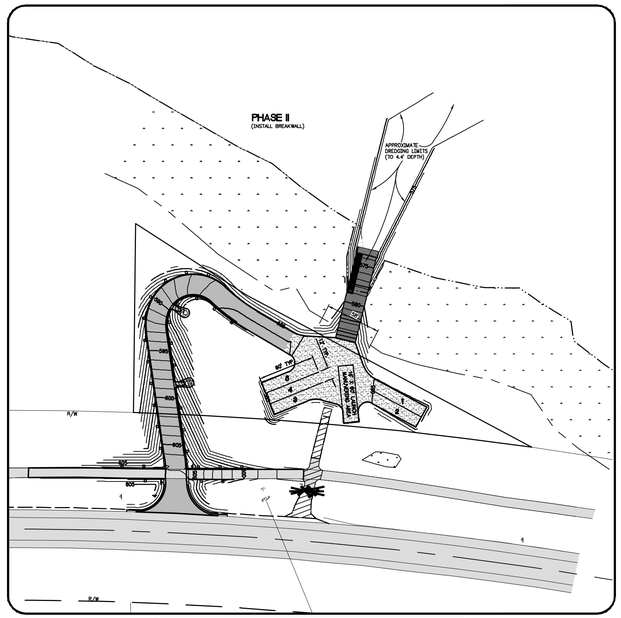

Phasing Detail - not to scale

Construction Notes

1. PAVING DETAIL (SEE DETAIL SHEETS)
2. INSTALL STEEL GUARDRAIL TYPE B (PER M.D.O.T. STANDARDS)
3. INSTALL WOOD GUARDRAIL (SEE DETAIL SHEETS)
4. INSTALL TREE TRUNK BARRICADE
5. INSTALL BITUMINOUS RAISED EDGE (SEE DETAIL SHEETS)
6. INSTALL TRAFFIC SIGN (STOP)
7. INSTALL TYPE C5 CONCRETE CURB & GUTTER (SEE DETAIL SHEETS)
8. INSTALL CONCRETE LAUNCH RAMP (SEE DETAIL SHEETS)
9. INSTALL WOOD SKID PIER (SEE DETAIL SHEETS)
10. INSTALL DOCK APPURTENANCES (SEE DETAIL SHEETS)
11. BIKE PATH PAVING DETAIL (SEE DETAIL SHEETS)
12. INSTALL PEDESTRIAN PATH STOP SIGN
13. GRAVEL SURFACE DETAIL (SEE DETAIL SHEETS)

Legend

TANK COVER	N.	NORTH
ELECTRICAL PANEL	S.	SOUTH
GUARD POST	E.	EAST
FLAG POLE	W.	WEST
FLOOD LIGHT	°	DEGREES
CATCH BASIN	'	FEET OR MINUTES
TEST LEAD	''	INCHES OR SECONDS
LIGHT POLE	Sq.	SQUARE
CURB STOP	Ft.	FEET
MANHOLE	Vol.	VOLUME
ELEC. TRANSFORMER	Pg.	PAGE
FIRE HYDRANT	O.R.	OFFICIAL RECORD
MAILBOX	Calc.	CALCULATED
SIGN	Rec.	RECORD
UTILITY POLE	R/W	RIGHT OF WAY
TELE. RISER	C/L	CENTERLINE
FOUND IRON	T	TITLE
FOUND MONUMENT		
SECTION CORNER LABEL		
SOIL BORING		

PROPOSED ASPHALT PAVEMENT
PROPOSED CONCRETE
CLEARING LIMITS

General Notes

1. DEVELOPMENT OF THIS SITE SHALL BE IN ACCORDANCE WITH TRIBAL, AND WHERE APPLICABLE, OTHER AGENCY REQUIREMENTS.
2. DIMENSIONS AND/OR COORDINATES ARE TO BACK OF CURB, UNLESS OTHERWISE NOTED.
3. PROPOSED ASPHALT DRIVE AND PARKING SHALL BE GRADED TO DIRECT ANY RUN-OFF TO ON-SITE STORM WATER MANAGEMENT SYSTEMS.

Site Data

PROPERTY OWNER:
U.S. AMERICA/TRUST FOR LITTLE TRAVERSE BAY BANDS OF ODAWA INDIANS

PARCEL ADDRESS:
US 31 N
CHARLEVOIX, MICHIGAN 49720

PROPERTY TAX NO: 007-102-009-00

PARCEL SIZE: 0.87 ACRE (GROSS) 0.46 ACRE (NET)

PARCEL ZONING: A-1 AGRICULTURAL

Gourdie-Fraser
Municipal | Development | Transportation
PH 231.946.5874
FAX 231.946.3703
www.gourdiefraser.com
123 W. Front Street
Traverse City, MI 49684

REV#	DATE	DRN	DESC

These documents are prepared in accordance with the contractual terms and conditions for this project.

LITTLE TRAVERSE BAY BAND OF ODAWA INDIANS
NINE MILE POINT BOAT LAUNCH
SITE AND PHASING PLAN
SECTION 2, T34N-R07W,
HAYES TOWNSHIP, CHARLEVOIX COUNTY, MICHIGAN

P.M.: DAN WAGNER
DR.: DAVE LEWIS
CKD.: DPW
JOB NO.: 12184

C3.2

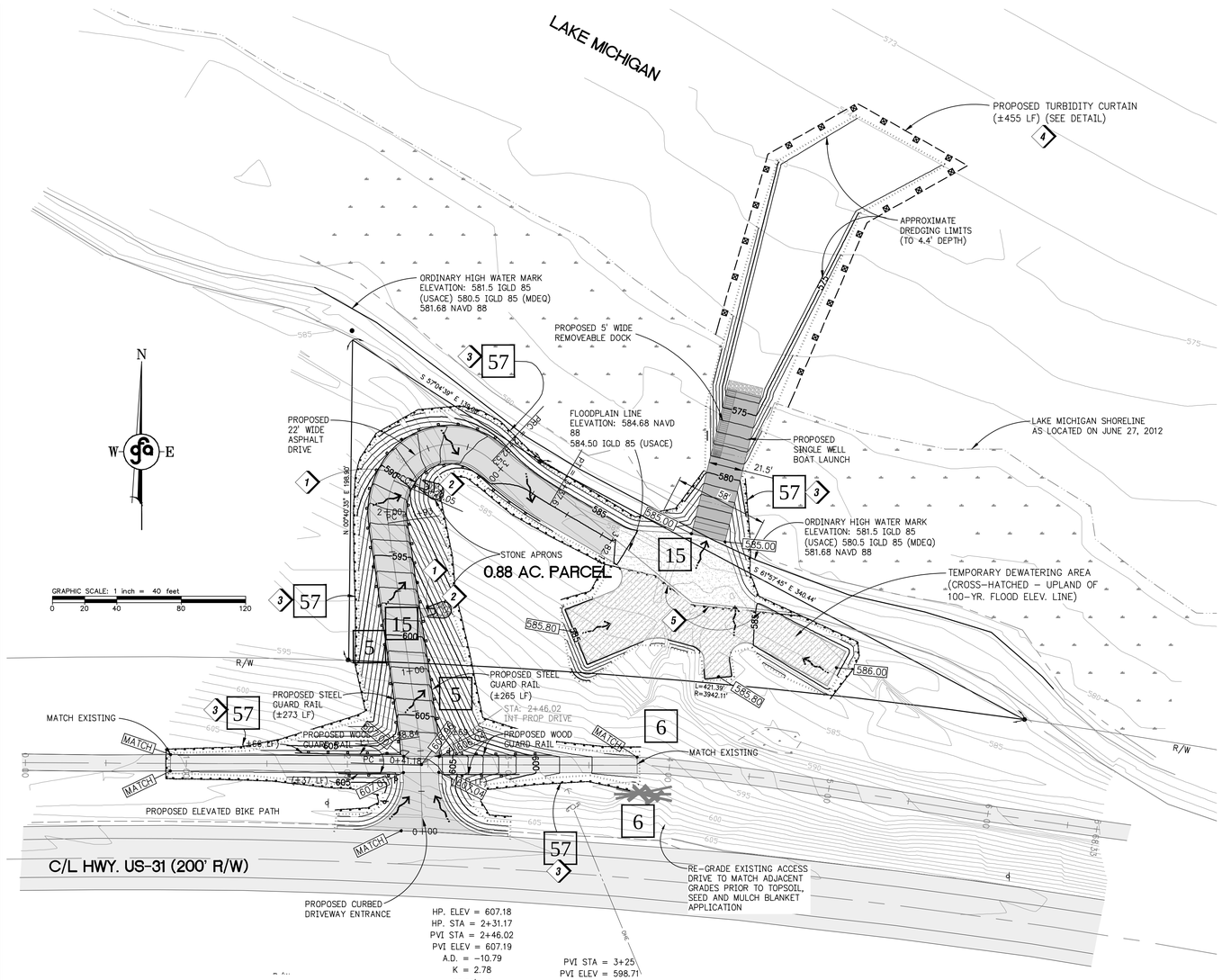

Michigan Unified Keying System

1	STRIPPING & STOCKING TOPSOIL	TOPSOIL MAY BE STOCKPILED ABOVE BORROW AREA TO ACT AS A DIVERSION STOCKPILE SHOULD BE TEMPORARILY SEEDED
5	SEEDING	INEXPENSIVE AND VERY EFFECTIVE, STABILIZES SOIL, THUS MINIMIZING EROSION PERMITS RUNOFF TO INFILTRATE SOIL, REDUCING RUNOFF VOLUME SHOULD INCLUDE PERPARED TOPSOIL BED
15	PAVING	PROTECTS AREA WHICH OTHERWISE CANNOT BE PROTECTED, BUT INCREASES RUNOFF VOLUME AND VELOCITY IRREGULAR SURFACE WILL HELP SLOW VELOCITY
57	GEOTEXTILE SILT FENCE	USES GEOTEXTILE AND POSTS OR BALES MAY BE CONSTRUCTED OR PREPACKAGED EASY TO CONSTRUCT AND LOCATE AS NECESSARY
6	SEEDING w/MULCH OR MATTING	FACILITATES ESTABLISHMENT OF VEGETATIVE COVER, EFFECTIVE FOR DRAINAGEWAYS w/ LOW VELOCITY, EASILY PLACED IN SMALL QUANTITES BY INEXPERIENCED PERSONNEL SHOULD INCLUDE PERPARED TOPSOIL BED

Legend

- EXISTING CONTOURS
- PROPOSED CONTOURS
- PROPOSED SPOT ELEVATION
- TURBIDITY CURTAIN
- PROPOSED DRAINAGE FLOW
- PROPOSED CATCH BASIN
- PROPOSED MANHOLE
- DIRECTION OF FLOW
- PROPOSED ASPHALT PAVEMENT
- PROPOSED CONCRETE
- CLEARING LIMITS
- PROPOSED SILT FENCE

Storm Sewer/Drainage Notes

1. INSTALL ASPHALT SPILLWAYS (SEE DETAILS)
2. INSTALL STONE RIP-RAP APRONS (SEE DETAILS)
3. INSTALL SILT FENCE (SEE DETAILS)
4. INSTALL TURBIDITY CURTAIN (SEE DETAILS)
5. INSTALL TEMPORARY SILT FENCE FOR DEWATERING AREA

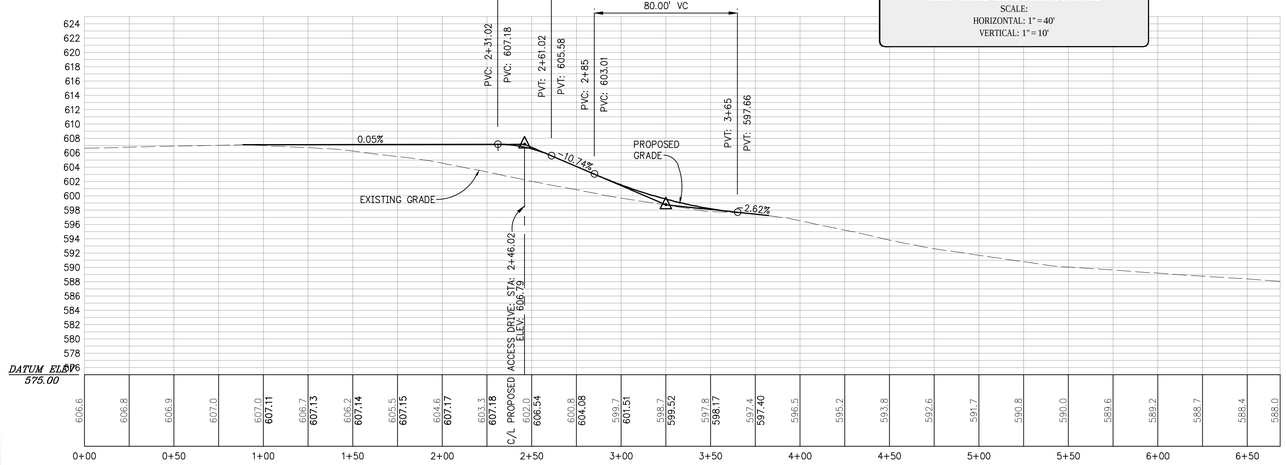

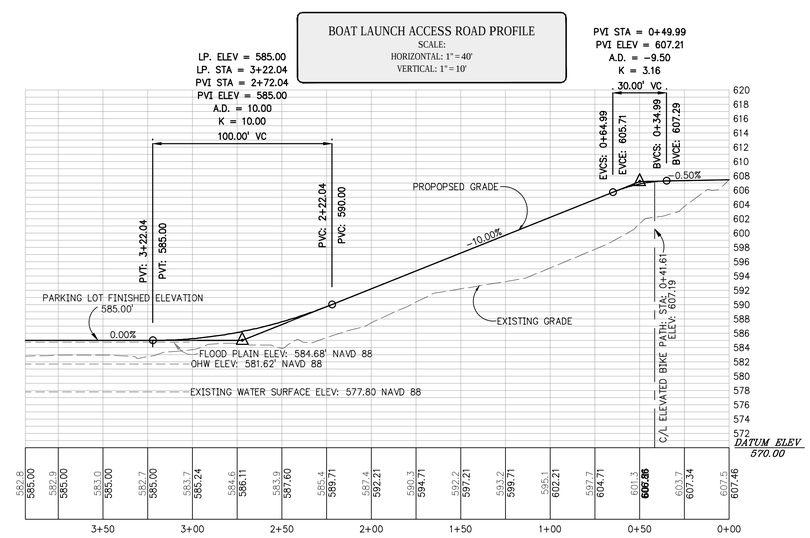

Gourdie-Fraser
Municipal | Development | Transportation
PH 231.946.5874
FAX 231.946.3703
www.gourdie-fraser.com
123 W. Front Street
Traverse City, MI 49684

REV#	DATE	DRN	DESC

These documents are prepared in accordance with the contractual terms and conditions for this project.

LITTLE TRAVERSE BAY BAND OF ODAWA INDIANS
NINE MILE POINT BOAT LAUNCH
GRADING, DRAINAGE, AND SOIL EROSION CONTROL PLAN
SECTION 2, T34N-R07W,
HAYES TOWNSHIP, CHARLEVOIX COUNTY, MICHIGAN

P.M.: DAN WAGNER
DR.: DAVE LEWIS
CKD.: DPW
JOB NO.: 12184

C3.3

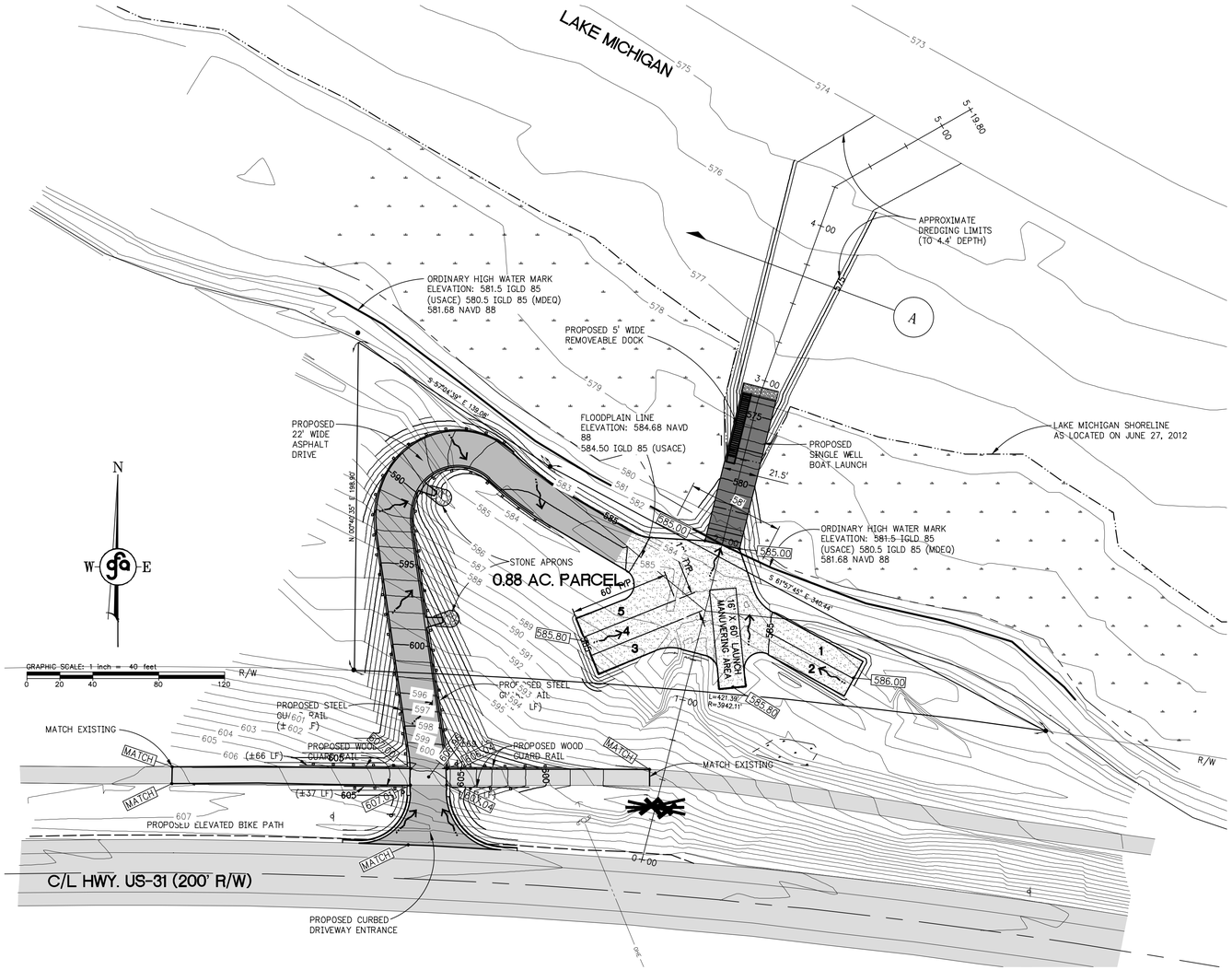

OVERALL SITE AND BOAT RAMP PROFILE
SCALE:
HORIZONTAL: 1" = 40'
VERTICAL: 1" = 10'

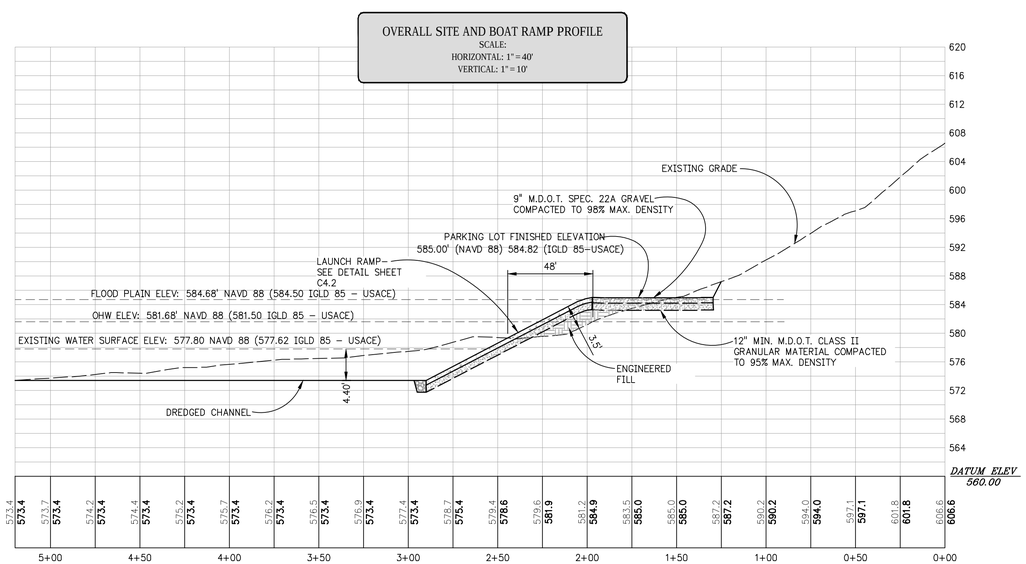

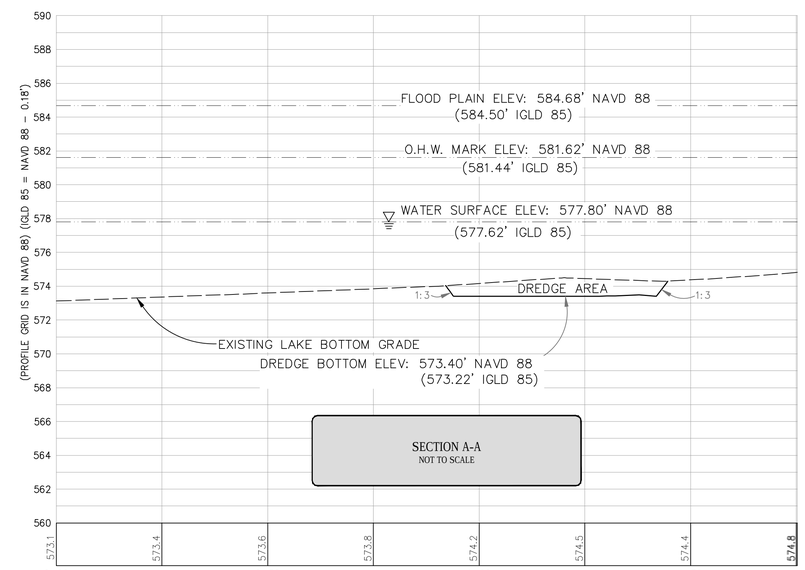

SECTION A-A
NOT TO SCALE

Gourdie-Fraser
Municipal | Development | Transportation
PH 231.946.5874
FAX 231.946.3703
www.gourdiefraser.com
123 W Front Street
Traverse City, MI 49684

REV #	DATE	DRN	DESC
1	11-29-12	CDL	REVISED BREAKWALL AND ELEVATIONS

LITTLE TRAVERSE BAY BAND OF ODAWA INDIANS
NINE MILE POINT BOAT LAUNCH
SITE PROFILE
SECTION 2, T34N-R07W,
HAYES TOWNSHIP, CHARLEVOIX COUNTY, MICHIGAN

These documents are prepared in accordance with the contractual terms and conditions for this project.

P.M.: DAN WAGNER
DR.: DAVE LEWIS
CKD.: DPW
JOB NO.: 12184
C3.4

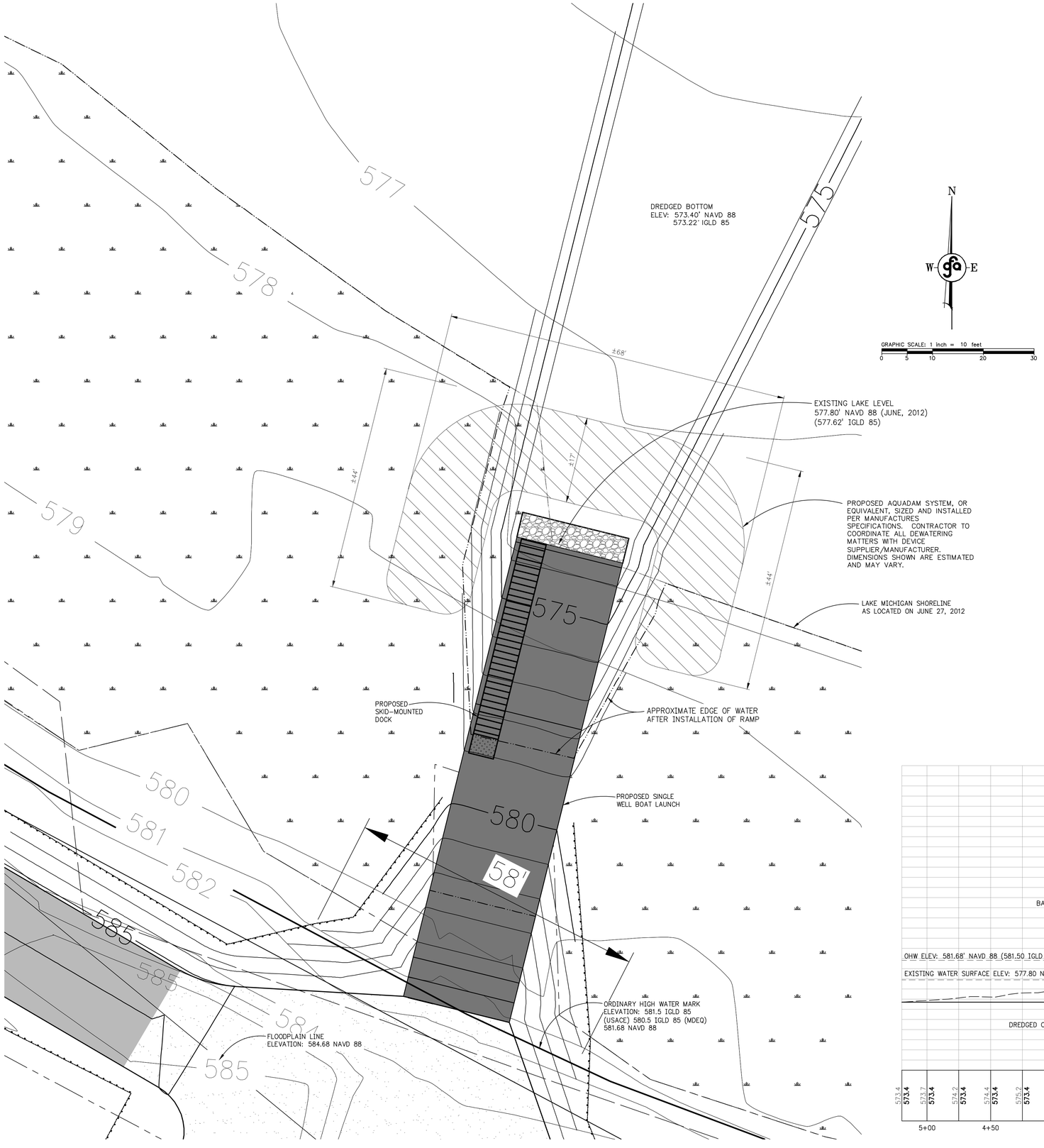

DEWATERING STRUCTURE EXAMPLE

COFFERDAM INSTALLATION PROFILE
SCALE:
HORIZONTAL: 1" = 40'
VERTICAL: 1" = 10'

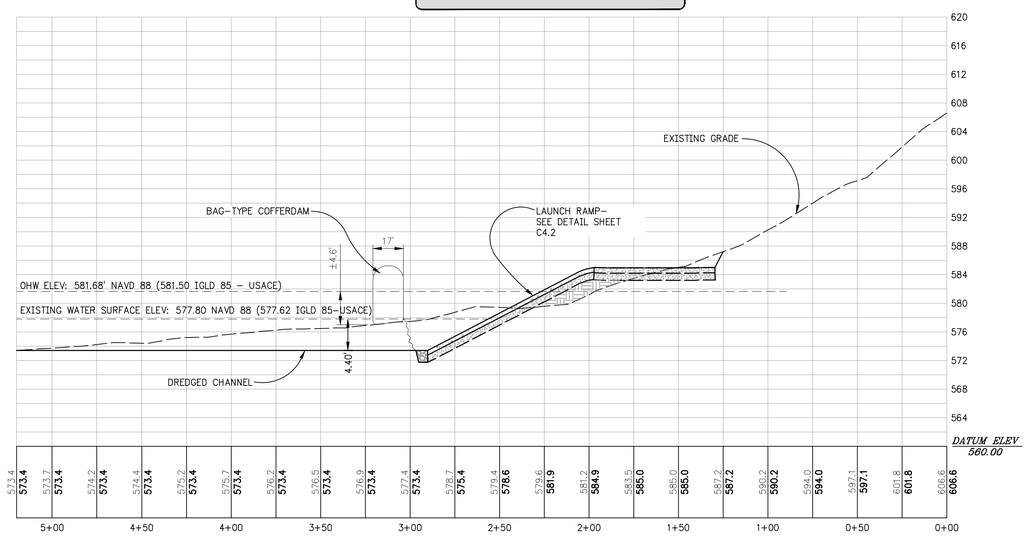

Gourdie-Fraser
Municipal | Development | Transportation
PH 231.946.5874
FAX 231.946.3703
www.gourdiefraser.com
123 W. Front Street
Traverse City, MI 49684

REV #	DATE	DRN	DESC

These documents are prepared in accordance with the contractual terms and conditions for this project.

LITTLE TRAVERSE BAY BAND OF ODAWA INDIANS
NINE MILE POINT BOAT LAUNCH
AQUADAM DETAIL
SECTION 2, T34N-R07W,
HAYES TOWNSHIP, CHARLEVOIX COUNTY, MICHIGAN

P.M.: DAN WAGNER
DR.: DAVE LEWIS
CKD.: DPW
JOB NO.: 12184

C3.5

S:\0_GFA\12184 LITTLE TRAVERSE BAY BAND OF ODAWA INDIANS\CADD\DWGS\C3.5 DETAIL.DWG

Figure 2:

Deep Turbidity Curtain

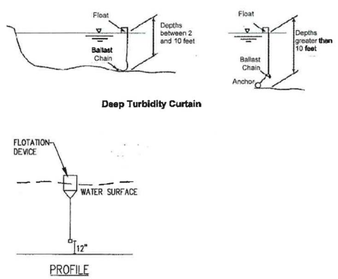

Source: Adapted from Michigan Department of Transportation 2006 Soil Erosion & Sedimentation Control Manual and Michigan Department of Management and Budget 2003 Soil Erosion and Sedimentation Control Guidebook

1 C4.1 TURBIDITY CURTAIN DETAIL

NO SCALE

TC-6 v2012.12.5

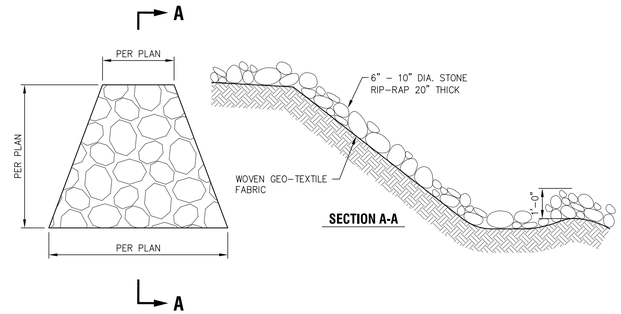

2 C4.1 STONE RIP-RAP APRON

NO SCALE

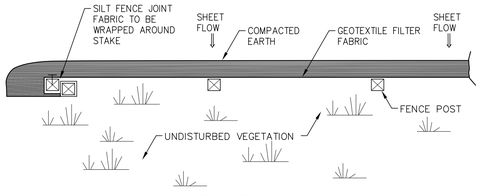

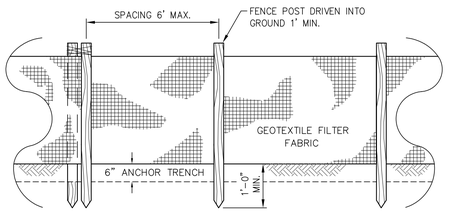

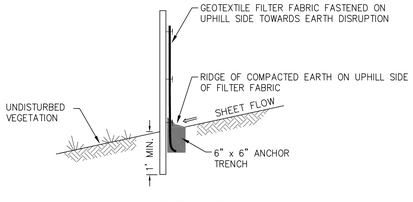

3 C4.3 SILT FENCE DETAILS

NO SCALE

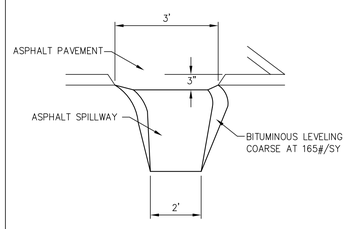

4 C4.1 ASPHALT SPILLWAY DETAIL

NO SCALE

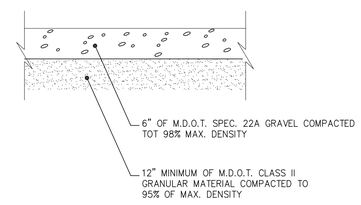

5 C4.1 GRAVEL PAVING DETAIL

NO SCALE

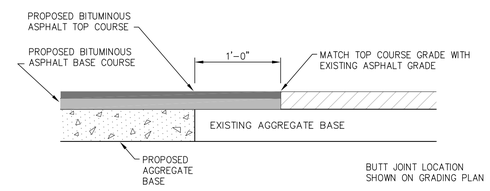

6 C4.1 BUTT JOINT DETAIL

NO SCALE

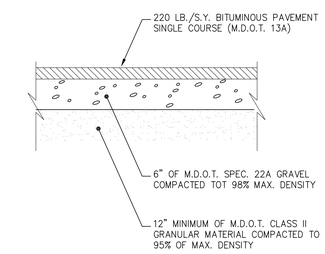

7 C4.1 BIKE PATH PAVING DETAIL

NO SCALE

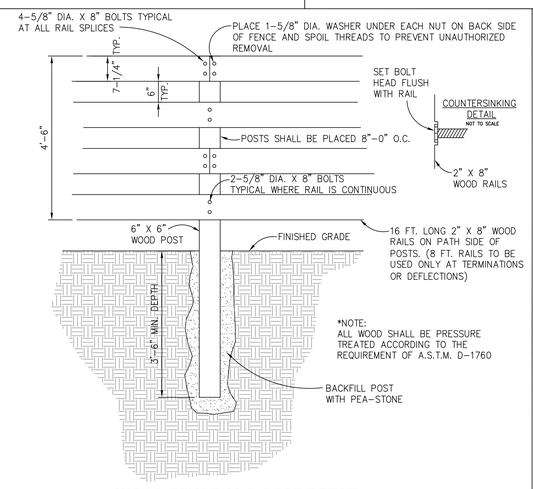

8 C4.1 WOOD FENCE AND POST DETAIL

NO SCALE

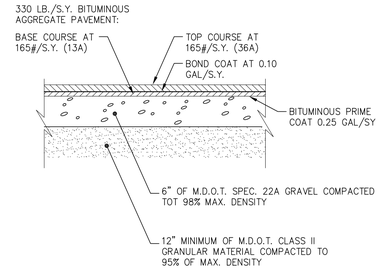

9 C4.1 PAVING DETAIL

NO SCALE

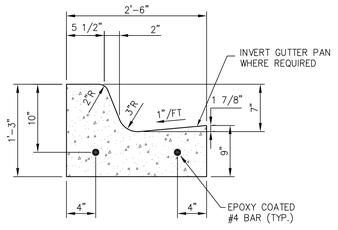

10 C4.1 CURB DETAIL

(M.D.O.T. TYPE C5)
NO SCALE

Gourdie-Fraser
Municipal | Development | Transportation
PH 231.946.5874
FAX 231.946.3703
WWW. gourdiefraser.com
123 W Front Street
Traverse City, MI 49684

REV#	DATE	DRN

DESC

LITTLE TRAVERSE BAY BAND OF ODAWA INDIANS
NINE MILE POINT BOAT LAUNCH
SOIL EROSION CONTROL AND PAVING DETAILS
SECTION 2, T34N-R07W,
HAYES TOWNSHIP, CHARLEVOIX COUNTY, MICHIGAN

These documents are prepared in accordance with the contractual terms and conditions for this project.

P.M.: DANNIEL P. WAGNER
DR.: DAVE LEWIS
CKD.: DAN WAGNER
JOB NO.: 12184
C4.1

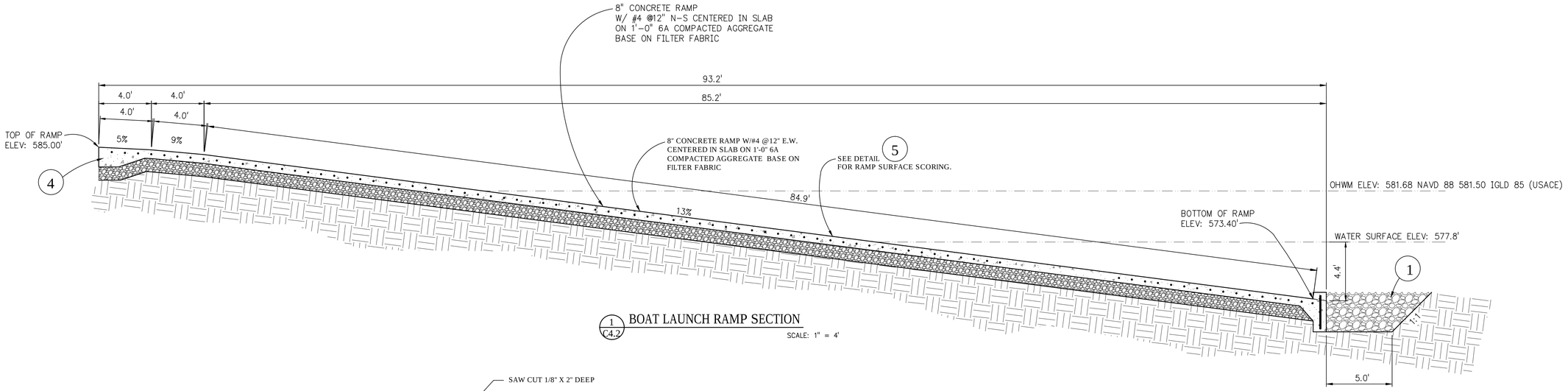

1 / C4.2 BOAT LAUNCH RAMP SECTION

SCALE: 1" = 4'

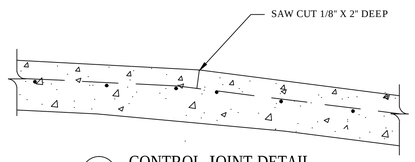

2 CONTROL JOINT DETAIL

NOT TO SCALE

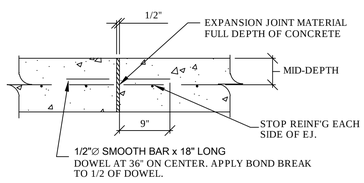

3 EXPANSION JOINT DETAIL

NOT TO SCALE

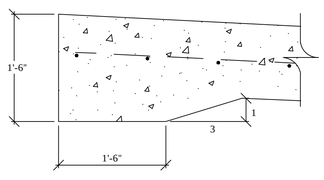

4 PAVEMENT DETAIL

NOT TO SCALE

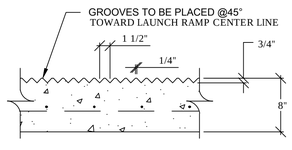

5 RAMP SCORING DETAIL

NOT TO SCALE

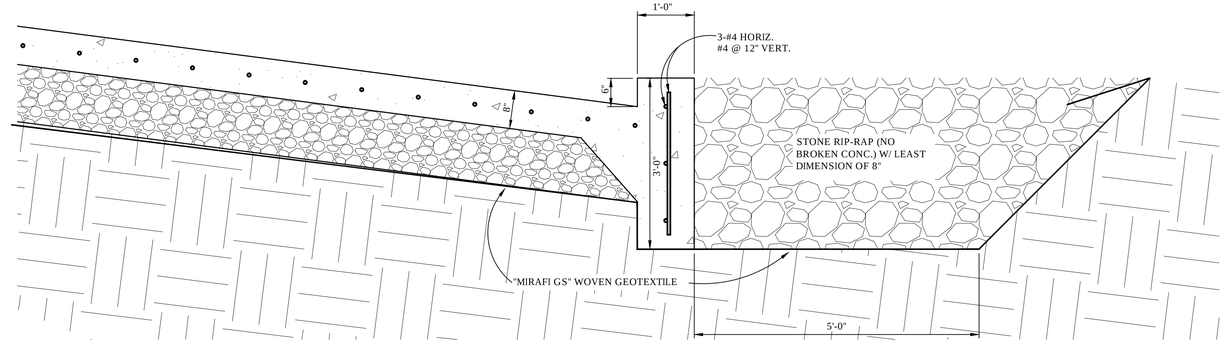

1 ROCK CRIB DETAIL

NOT TO SCALE

Gourdie-Fraser
Municipal | Development | Transportation
PH 231.946.5874
FAX 231.946.3703
www.gourdiefraser.com
123 W. Front Street
Traverse City, MI 49684

REV #	DATE	DRN	DESC

These documents are prepared in accordance with the contractual terms and conditions for this project.

LITTLE TRAVERSE BAY BAND OF ODAWA INDIANS

NINE MILE POINT BOAT LAUNCH

RAMP DETAILS

SECTION 2, T34N-R07W,

HAYES TOWNSHIP, CHARLEVOIX COUNTY, MICHIGAN

P.M.: DAN WAGNER

DR.: DAVE LEWIS | CKD.: DPW

JOB NO.: 12184

C4.2

T:\PROJECTS\12184\PA\DWG\DETAILS\REV-0.5\SUBTRAILS\BDRSCD\FDR\CSDRFS\COMMENTS\DWG\09/22/14 1:06 PM\ DLEWIS

MAIN PIER DECKING

1. DECKING SHALL BE TREATED WITH WOOD BORNE PRESERVATIVES.
2. DECKING SHALL BE INSTALLED BARK OR BEST SIDE UP.
3. DECKING SHALL BE SPACED W/ MAX. 1/8" SPACE BETWEEN BOARDS.
4. DECKING SHALL BE NOMINAL THICKNESS OF 2".
5. DECKING SHALL BE 8" IN WIDTH OR LESS.
6. DECKING SHALL BE LAGGED IN PLACE WHERE ACCESS IS REQUIRED BENEATH DECK.
7. DECKING SHALL BE INSTALLED TRANSVERSE TO THE LONGITUDINAL AXIS OF THE PIERS.
8. SEE SPECIFICATIONS FOR LUMBER REQUIREMENTS.

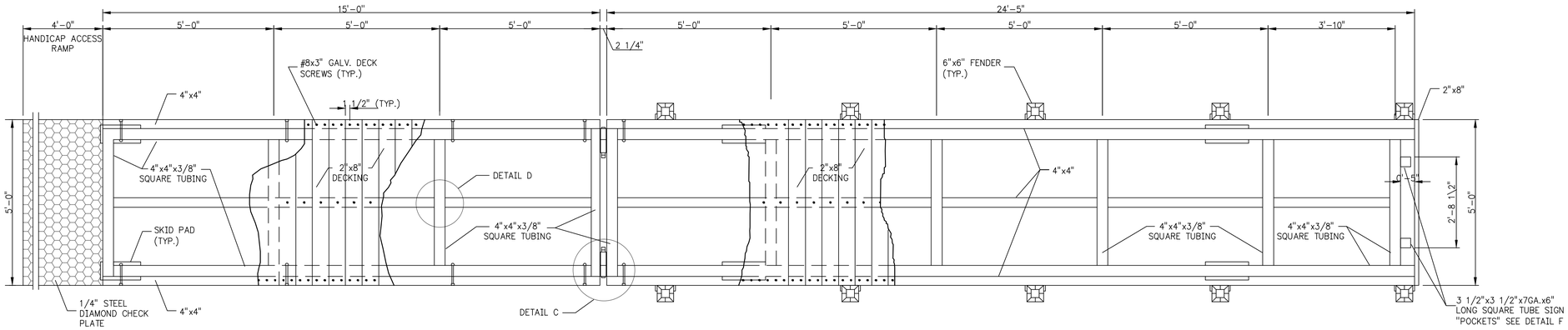

PLAN

STANDARD 40' SKID PIER DETAIL

NO SCALE

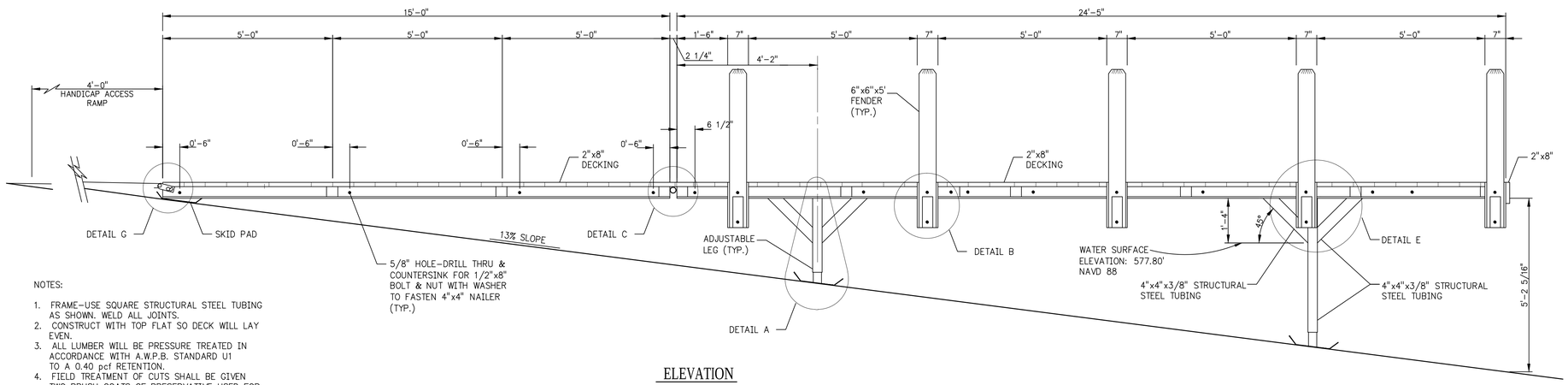

NOTES:

1. FRAME-USE SQUARE STRUCTURAL STEEL TUBING AS SHOWN. WELD ALL JOINTS.
2. CONSTRUCT WITH TOP FLAT SO DECK WILL LAY EVEN.
3. ALL LUMBER WILL BE PRESSURE TREATED IN ACCORDANCE WITH A.W.P.B. STANDARD U1 TO A 0.40 pcf RETENTION.
4. FIELD TREATMENT OF CUTS SHALL BE GIVEN TWO BRUSH COATS OF PRESERVATIVE USED FOR ORIGINAL TREATMENT.
5. ALL METAL TO BE PAINTED WITH ONE COAT PRIMER AND TWO COATS PAINT, RUSTOLEUM (OR EQUAL). COLOR: BLACK.

ELEVATION

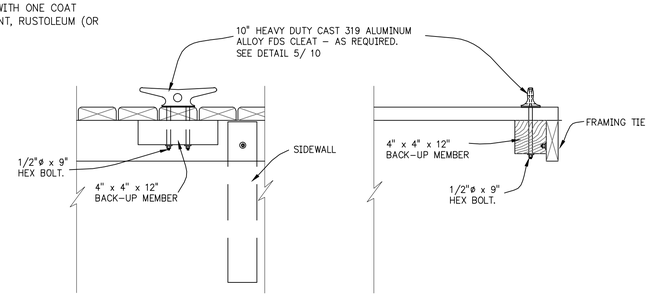

SIDE ELEVATION SECTION

END ELEVATION SECTION

DOCK CLEAT DETAIL

NO SCALE

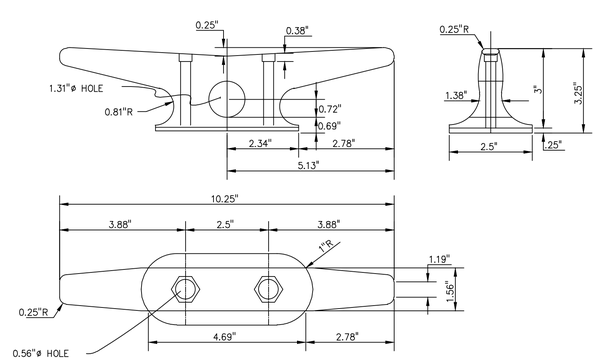

CLEAT DETAIL

NO SCALE

Gourdie-Fraser
Municipal | Development | Transportation
PH 231.946.5874
FAX 231.946.3703
www.gourdiefraser.com
123 W Front Street
Traverse City, MI 49684

REV #	DATE	DRN	DESC

LITTLE TRAVERSE BAY BAND OF ODAWA INDIANS
NINE MILE POINT BOAT LAUNCH
SKID PIER DETAIL
SECTION 2, T34N-R07W,
HAYES TOWNSHIP, CHARLEVOIX COUNTY, MICHIGAN

These documents are prepared in accordance with the contractual terms and conditions for this project.

P.M.: DAN WAGNER
DR.: DAVE LEWIS
CKD.: DPW
JOB NO.: 12184
SHT C4.3

T:\PROJECTS\12184\ENG\DETAILS\DETAILS_REVISED\DETAILS_CORPS COMMENTS.DWG 08/27/14 1:06 PM DLEWIS

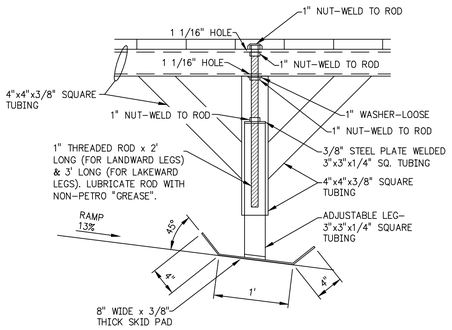

DETAIL A

NO SCALE

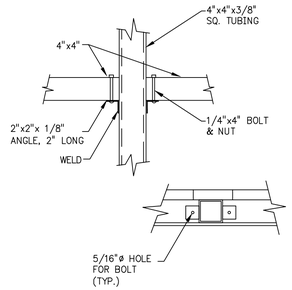

DETAIL D

NO SCALE

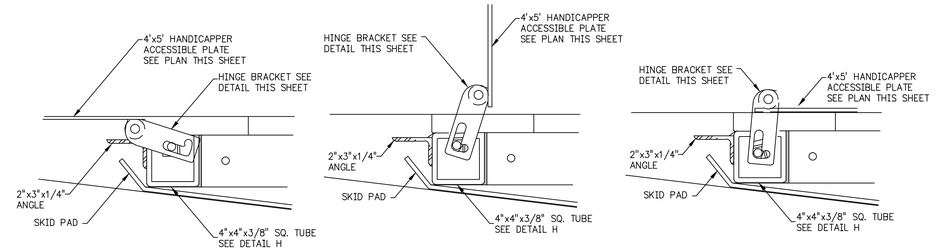

HANDICAP ACCESSIBLE PLATE SHOWN IN USE POSITION

HANDICAP ACCESSIBLE PLATE SHOWN IN TRANSITION POSITION

HANDICAP ACCESSIBLE PLATE SHOWN IN STORAGE POSITION

NOTE: BOLT THAT HOLDS HINGE BRACKET IN PLACE NOT SHOWN

DETAIL G

NO SCALE

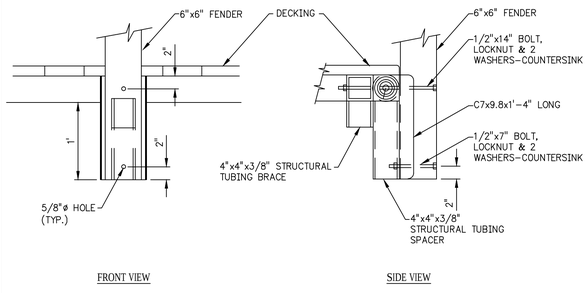

DETAIL B

NO SCALE

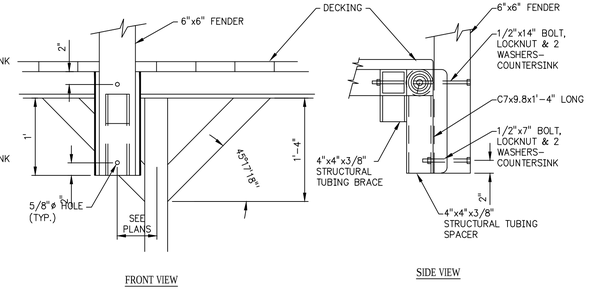

DETAIL E

NO SCALE

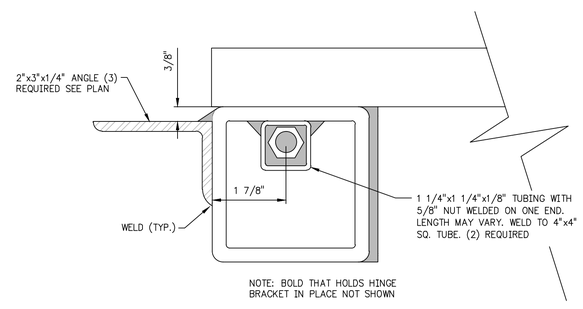

NOTE: BOLD THAT HOLDS HINGE BRACKET IN PLACE NOT SHOWN

DETAIL H

NO SCALE

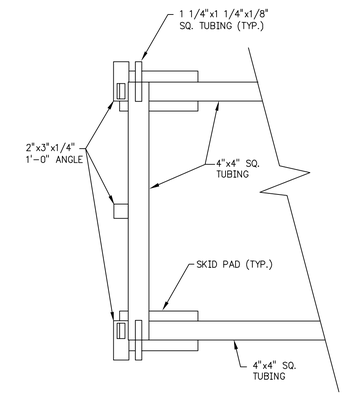

PLAN OF 2"x3" ANGLE

NO SCALE

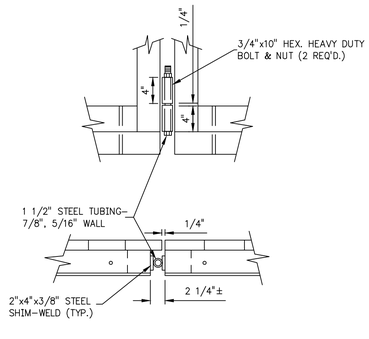

DETAIL C

NO SCALE

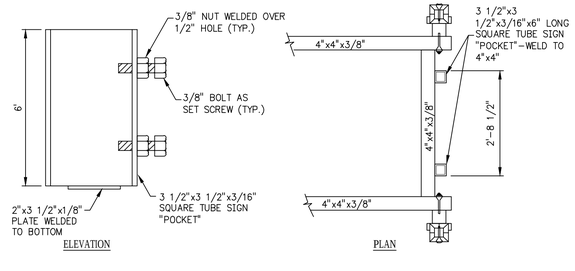

DETAIL F

NO SCALE

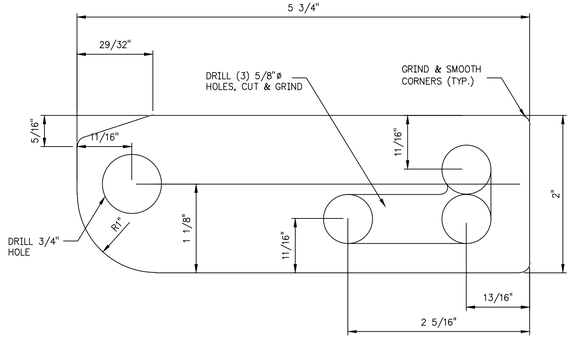

HINGE BRACKET

NO SCALE

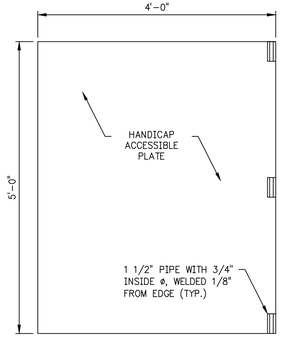

BOTTOM VIEW OF ACCESS PLATE

NO SCALE

Gourdie-Fraser
Municipal | Development | Transportation
PH 231.946.5874
FAX 231.946.3703
www.gourdiefraser.com
123 W. Front Street
Traverse City, MI 49684

REV#	DATE	DRN	DESC

LITTLE TRAVERSE BAY BAND OF ODAWA INDIANS
NINE MILE POINT BOAT LAUNCH
SKID PIER CONSTRUCTION DETAILS
SECTION 2, T34N-R07W,
HAYES TOWNSHIP, CHARLEVOIX COUNTY, MICHIGAN

These documents are prepared in accordance with the contractual terms and conditions for this project.

P.M.: DAN WAGNER
DR.: DAVE LEWIS
CKD.: DPW
JOB NO.: 12184
C4.4

T:\PROJECTS\12184\DWG\DETAILS\PIER\DETAILS\PIER-DETAILS.DWG\C4.4 1:06 PM DLEWIS